CDCLVC11xx 3.3-V and 2.5-V LVCMOS High-Performance Clock Buffer Family

1 Features

- High-Performance 1:2, 1:3, 1:4, 1:6, 1:8, 1:10, 1:12 LVCMOS Clock Buffer Family
- Very Low Pin-to-Pin Skew < 50 ps
- Very Low Additive Jitter < 100 fs
- Supply Voltage: 3.3 V or 2.5 V
- f_{max} = 250 MHz for 3.3 V
  f_{max} = 180 MHz for 2.5 V
- Operating Temperature Range: –40°C to 85°C
- Available in 8-, 14-, 16-, 20-, 24-Pin TSSOP Package (All Pin-Compatible)

2 Applications

General-Purpose Communication, Industrial, and Consumer Applications

3 Description

The CDCLVC11xx is a modular, high-performance, low-skew, general-purpose clock buffer family from Texas Instruments.

The entire family is designed with a modular approach in mind. It is intended to round up TI's series of LVCMOS clock generators.

Seven different fan-out variations, 1:2 to 1:12, are available. All of the devices are pin-compatible to each other for easy handling.

All family members share the same high performing characteristics such as low additive jitter, low skew, and wide operating temperature range.

The CDCLVC11xx supports an asynchronous output enable control (1G) which switches the outputs into a low state when 1G is low.

The CDCLVC11xx family operates in a 2.5-V and 3.3-V environment and are characterized for operation from –40°C to 85°C.

Device Information(1)

PART NUMBER	PACKAGE	BODY SIZE (NOM)
CDCLVC1102	TSSOP (8)	3.00 mm × 4.40 mm
CDCLVC1103		
CDCLVC1104		
CDCLVC1106	TSSOP (14)	5.00 mm × 4.40 mm
CDCLVC1108	TSSOP (16)	
CDCLVC1110	TSSOP (20)	6.50 mm × 4.40 mm
CDCLVC1112	TSSOP (24)	7.80 mm × 4.40 mm

(1) For all available packages, see the orderable addendum at the end of the data sheet.

Functional Block Diagram

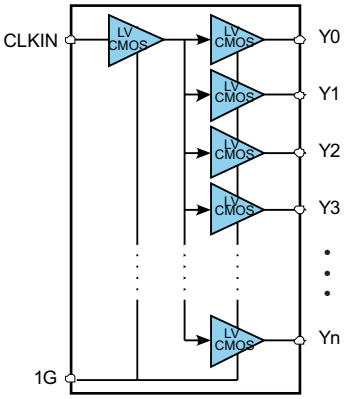

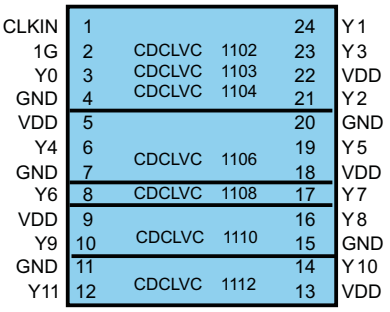

An IMPORTANT NOTICE at the end of this data sheet addresses availability, warranty, changes, use in safety-critical applications, intellectual property matters and other important disclaimers. PRODUCTION DATA.

Table of Contents

1 Features ... 1
2 Applications ... 1
3 Description ... 1
4 Revision History ... 2
5 Pin Configuration and Functions ... 3
6 Specifications ... 5
6.1 Absolute Maximum Ratings ... 5
6.2 ESD Ratings ... 5
6.3 Recommended Operating Conditions ... 5
6.4 Thermal Information ... 6
6.5 Electrical Characteristics ... 6
6.6 Switching Characteristics ... 7
6.7 Typical Characteristics ... 7
7 Parameter Measurement Information ... 8
8 Detailed Description ... 10
8.1 Overview ... 10
8.2 Functional Block Diagram ... 10
8.3 Feature Description ... 10
8.4 Device Functional Modes ... 10
9 Application and Implementation ... 11
9.1 Application Information ... 11
9.2 Typical Application ... 11
10 Power Supply Recommendations ... 12
10.1 Power Considerations ... 13
11 Layout ... 14
11.1 Layout Guidelines ... 14
11.2 Layout Example ... 14
12 Device and Documentation Support ... 15
12.1 Related Links ... 15
12.2 Receiving Notification of Documentation Updates 15
12.3 Community Resources ... 15
12.4 Trademarks ... 15
12.5 Electrostatic Discharge Caution ... 15
12.6 Glossary ... 15
13 Mechanical, Packaging, and Orderable Information ... 15

4 Revision History

Changes from Revision A (October 2014) to Revision B	Page
• Changed Packaging name from *TTSOP* to *TSSOP* in *Device Information* Table	1
• Changed CDCLVC1110 Y8 pin number from: 10 to: 12	3
• Changed CDCLVC1110 Y9 pin number from: — to: 10	3
• Moved T_{stg} from *ESD Ratings* to *Absolute Maximum Ratings*	5
• Added *Receiving Notification of Documentation Updates* and *Community Resources* sections	15

Changes from Original (May 2010) to Revision A	Page
• Added *ESD Ratings* table, *Feature Description* section, *Device Functional Modes*, *Application and Implementation* section, *Power Supply Recommendations* section, *Layout* section, *Device and Documentation Support* section, and *Mechanical, Packaging, and Orderable Information* section	1

Copyright © 2010–2017, Texas Instruments Incorporated

5 Pin Configuration and Functions

PW Package
8-, 14-, 16-, 20, 24-Pin TSSOP
Top View

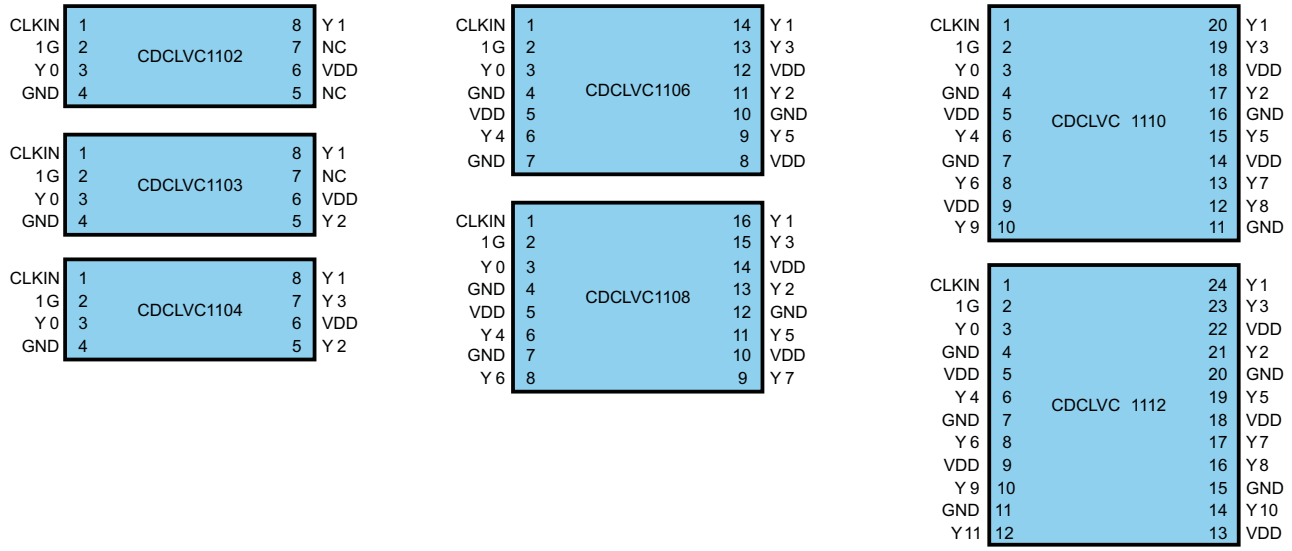

Pin Functions

PIN								TYPE	DESCRIPTION
NAME	CDCLVC 1102	CDCLVC 1103	CDCLVC 1104	CDCLVC 1106	CDCLVC 1108	CDCLVC 1110	CDCLVC 1112		
LVCMOS CLOCK INPUT									
CLKIN	1	1	1	1	1	1	1	Input	Input Pin
CLOCK OUTPUT ENABLE									
1G	2	2	2	2	2	2	2	Input	Output Enable
LVCMOS CLOCK OUTPUT									
Y0	3	3	3	3	3	3	3	Output	LVCMOS output. Unused outputs can be left floating.
Y1	8	8	8	14	16	20	24		
Y2	—	5	5	11	13	17	21		
Y3	—	—	7	13	15	19	23		
Y4	—	—	—	6	6	6	6		
Y5	—	—	—	9	11	15	19		
Y6	—	—	—	—	8	8	8		
Y7	—	—	—	—	9	13	17		
Y8	—	—	—	—	—	12	16		
Y9	—	—	—	—	—	10	10		
Y10	—	—	—	—	—	—	14		
Y11	—	—	—	—	—	—	12		
SUPPLY VOLTAGE									
V_{DD}	6	6	6	5	5	5	5	Power	2.5-V or device supply
							9		
						9	13		
				8	10	14	18		
				12	14	18	22		
GROUND									

Pin Functions (continued)

PIN								TYPE	DESCRIPTION
NAME	CDCLVC 1102	CDCLVC 1103	CDCLVC 1104	CDCLVC 1106	CDCLVC 1108	CDCLVC 1110	CDCLVC 1112		
GND	4	4	4	4	4	4	4	GND	Device ground
							7		
						7	11		
				7	7	11	15		
				10	12	16	20		

Copyright © 2010–2017, Texas Instruments Incorporated

6 Specifications

6.1 Absolute Maximum Ratings

over operating free-air temperature range (unless otherwise noted) (1)

		MIN	MAX	UNIT
V_{DD}	Supply voltage	–0.5	4.6	V
V_{IN}	Input voltage (2)	–0.5	V_{DD} + 0.5	V
V_O	Output voltage (2)	–0.5	V_{DD} + 0.5	V
I_{IN}	Input current	–20	20	mA
I_O	Continuous output current	–50	50	mA
T_J	Maximum junction temperature		125	°C
T_{stg}	Storage temperature	–65	150	°C

(1) Stresses beyond those listed under *Absolute Maximum Ratings* may cause permanent damage to the device. These are stress ratings only and functional operation of the device at these or any other conditions beyond those indicated under *Recommended Operating Conditions* is not implied. Exposure to absolute-maximum-rated conditions for extended periods may affect device reliability.
(2) This value is limited to 4.6 V maximum.

6.2 ESD Ratings

			VALUE	UNIT
$V_{(ESD)}$	Electrostatic discharge	Human-body model (HBM), per ANSI/ESDA/JEDEC JS-001 (1)	±4000	V
		Charged-device model (CDM), per JEDEC specification JESD22-C101 (2)	±1500	

(1) JEDEC document JEP155 states that 500-V HBM allows safe manufacturing with a standard ESD control process.
(2) JEDEC document JEP157 states that 250-V CDM allows safe manufacturing with a standard ESD control process.

6.3 Recommended Operating Conditions

over operating free-air temperature range (unless otherwise noted)

			MIN	NOM	MAX	UNIT
V_{DD}	Supply voltage	3.3-V supply	3.0	3.3	3.6	V
		2.5-V supply	2.3	2.5	2.7	
V_{IL}	Low-level input voltage	V_{DD} = 3.0 V to 3.6 V			V_{DD}/2 – 600	mV
		V_{DD} = 2.3 V to 2.7 V			V_{DD}/2 – 400	
V_{IH}	High-level input voltage	V_{DD} = 3.0 V to 3.6 V	V_{DD}/2 + 600			mV
		V_{DD} = 2.3 V to 2.7 V	V_{DD}/2 + 400			
V_{th}	Input threshold voltage	V_{DD} = 2.3 V to 3.6 V		V_{DD}/2		mV
t_r / t_f	Input slew rate		1		4	V/ns
t_w	Minimum pulse width at CLKIN	V_{DD} = 3.0 V to 3.6 V	1.8			ns
		V_{DD} = 2.3 V to 2.7 V	2.75			
f_{CLK}	LVCMOS clock Input Frequency	V_{DD} = 3.0 V to 3.6 V	DC		250	MHz
		V_{DD} = 2.3 V to 2.7 V	DC		180	
T_A	Operating free-air temperature		–40		85	°C

Copyright © 2010–2017, Texas Instruments Incorporated

6.4 Thermal Information

THERMAL METRIC[1]		CDCLVC1102 CDCLVC1103 CDCLVC1104	CDCLVC1106	CDCLVC1108	CDCLVC11010	CDCLVC1112	UNIT
		PW (TSSOP)					
		8 PINS	14 PINS	16 PINS	20 PINS	24 PINS	
$R_{\theta JA}$	Junction-to-ambient thermal resistance[2]	149.4	112.6	108.4	83.0	87.9	°C/W
$R_{\theta JC(top)}$	Junction-to-case(top) thermal resistance[3]	69.4	48.0	33.6	32.3	26.5	°C/W

(1) For more information about traditional and new thermal metrics, see the *IC Package Thermal Metrics* application report.
(2) The junction-to-ambient thermal resistance under natural convection is obtained in a simulation on a JEDEC-standard, high-K board, as specified in JESD51-7, in an environment described in JESD51-2a.
(3) The junction-to-case (top) thermal resistance is obtained by simulating a cold plate test on the package top. No specific JEDEC-standard test exists, but a close description can be found in the ANSI SEMI standard G30-88.

6.5 Electrical Characteristics

Over recommended operating free-air temperature range (unless otherwise noted)

PARAMETER		TEST CONDITIONS	MIN	TYP[1]	MAX	UNIT
OVERALL PARAMETERS FOR ALL VERSIONS						
I_{DD}	Static device current[2]	1G = V_{DD}; CLKIN = 0 V or V_{DD}; I_O = 0 mA; V_{DD} = 3.6 V		6	10	mA
		1G = V_{DD}; CLKIN = 0 V or V_{DD}; I_O = 0 mA; V_{DD} = 2.7 V		3	6	
I_{PD}	Power-down current	1G = 0 V; CLKIN = 0 V or V_{DD}; I_O = 0 mA; V_{DD} = 3.6 V or 2.7 V			60	µA
C_{PD}	Power dissipation capacitance per output[3]	V_{DD} = 3.3 V; f = 10 MHz		6		pF
		V_{DD} = 2.5 V; f = 10 MHz		4.5		
I_I	Input leakage current at 1G	V_I = 0 V or V_{DD}, V_{DD} = 3.6 V or 2.7 V	8		8	µA
	Input leakage current at CLKIN		25		25	
R_{OUT}	Output impedance	V_{DD} = 3.3 V		45		Ω
		V_{DD} = 2.5 V		60		
f_{OUT}	Output frequency	V_{DD} = 3 V to 3.6 V	DC		250	MHz
		V_{DD} = 2.3 V to 2.7 V	DC		180	
OUTPUT PARAMETERS FOR V_{DD} = 3.3 V ± 0.3 V						
V_{OH}	High-level output voltage	V_{DD} = 3 V, I_{OH} = –0.1 mA	2.9			V
		V_{DD} = 3 V, I_{OH} = –8 mA	2.5			
		V_{DD} = 3 V, I_{OH} = –12 mA	2.2			
V_{OL}	Low-level output voltage	V_{DD} = 3 V, I_{OL} = 0.1 mA			0.1	V
		V_{DD} = 3 V, I_{OL} = 8 mA			0.5	
		V_{DD} = 3 V, I_{OL} = 12 mA			0.8	
OUTPUT PARAMETERS FOR V_{DD} = 2.5 V ± 0.2 V						
V_{OH}	High-level output voltage	V_{DD} = 2.3 V, I_{OH} = –0.1 mA	2.2			V
		V_{DD} = 2.3 V, I_{OH} = –8 mA	1.7			
V_{OL}	Low-level output voltage	V_{DD} = 2.3 V, I_{OL} = 0.1 mA			0.1	V
		V_{DD} = 2.3 V, I_{OL} = 8 mA			0.5	

(1) All typical values are at respective nominal V_{DD}. For switching characteristics, outputs are terminated to 50 Ω to V_{DD}/2 (see Figure 3).
(2) For dynamic I_{DD} over frequency see and Figure 1.
(3) This is the formula for the power dissipation calculation (see and the *Power Considerations* section).
$P_{tot} = P_{stat} + P_{dyn} + P_{Cload}$ [W]
$P_{stat} = V_{DD} \times I_{DD}$ [W]
$P_{dyn} = C_{PD} \times V_{DD}2 \times f$ [W]
$P_{Cload} = C_{load} \times V_{DD}2 \times f \times n$ [W]
n = Number of switching output pins

Copyright © 2010–2017, Texas Instruments Incorporated

6.6 Switching Characteristics

over operating free-air temperature range (unless otherwise noted)

PARAMETER		TEST CONDITIONS	MIN	TYP	MAX	UNIT
OUTPUT PARAMETERS FOR V_{DD} = 3.3 V ± 0.3 V						
t_{PLH}, t_{PHL}	Propagation delay	CLKIN to Yn	0.8		2.0	ns
$t_{sk(o)}$	Output skew	Equal load of each output			50	ps
t_r/t_f	Rise and fall time	20%–80% (V_{OH} - V_{OL})	0.3		0.8	ns
t_{DIS}	Output disable time	1G to Yn			6	ns
t_{EN}	Output enable time	1G to Yn			6	ns
$t_{sk(p)}$	Pulse skew ; $t_{PLH(Yn)} – t_{PHL(Yn)}$ (1)	To be measured with input duty cycle of 50%			180	ps
$t_{sk(pp)}$	Part-to-part skew	Under equal operating conditions for two parts			0.5	ns
t_{jitter}	Additive jitter rms (2)	12 kHz to 20 MHz, f_{OUT} = 250 MHz			100	fs
OUTPUT PARAMETERS FOR V_{DD} = 2.5 V ± 0.2 V						
t_{PLH}, t_{PHL}	Propagation delay	CLKIN to Yn	1		2.6	ns
$t_{sk(o)}$	Output skew	Equal load of each output			50	ps
t_r/t_f	Rise and fall time	20%–80% reference point	0.3		1.2	ns
t_{DIS}	Output disable time	1G to Yn			10	ns
t_{EN}	Output enable time	1G to Yn			10	ns
$t_{sk(p)}$	Pulse skew ; $t_{PLH(Yn)} – t_{PHL(Yn)}$ (1)	To be measured with input duty cycle of 50%			220	ps
$t_{sk(pp)}$	Part-to-part skew	Under equal operating conditions for two parts			1.2	ns
t_{jitter}	Additive jitter rms (2)	12 kHz to 20 MHz, f_{OUT} = 180 MHz			350	fs

(1) $t_{sk(p)}$ depends on output rise- and fall-time (t_r/t_f). The output duty-cycle can be calculated: odc = $(t_{w(OUT)} \pm t_{sk(p)})/t_{period}$; $t_{w(OUT)}$ is pulse-width of output waveform and tperiod is $1/f_{OUT}$.
(2) Parameter is specified by characterization. Not tested in production.

6.7 Typical Characteristics

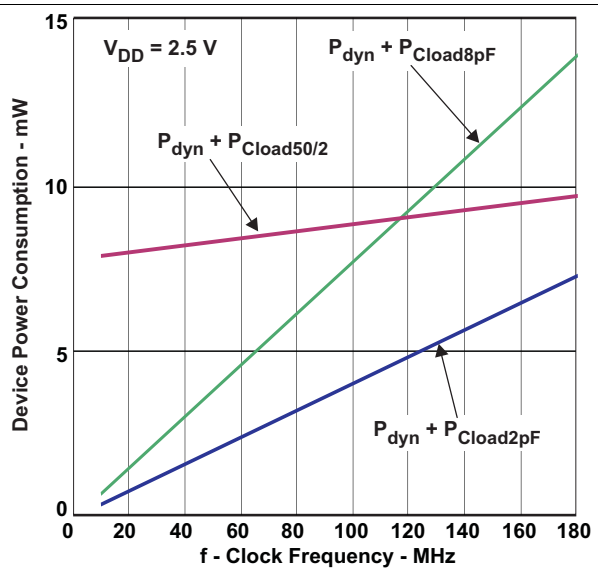

Figure 1. Device Power Consumption vs Clock Frequency (Load 50 Ω into V_{DD}/2; 2 pF, 8 pF; Per Output)

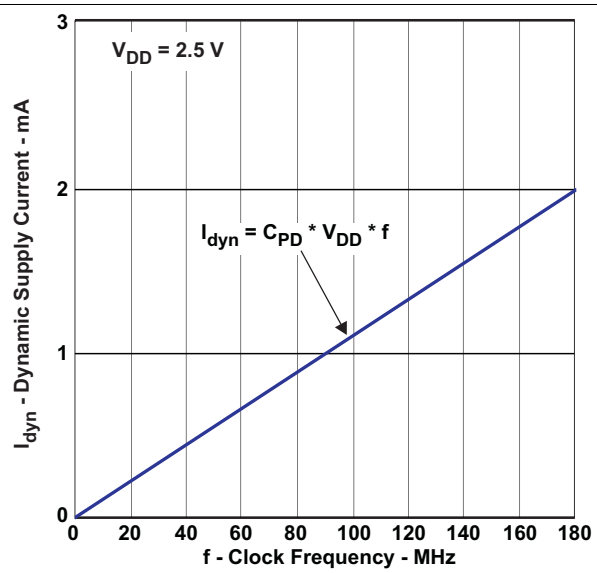

Figure 2. Dynamic Supply Current vs Clock Frequency (C_{PD} = 4.5 pF, No Load; Per Output)

7 Parameter Measurement Information

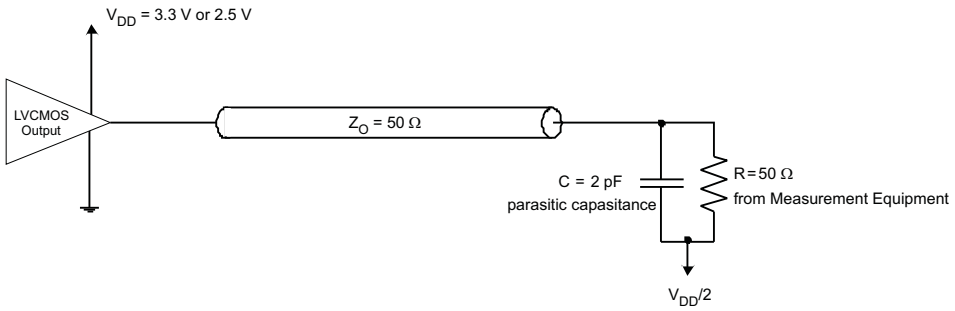

Figure 3. Test Load Circuit

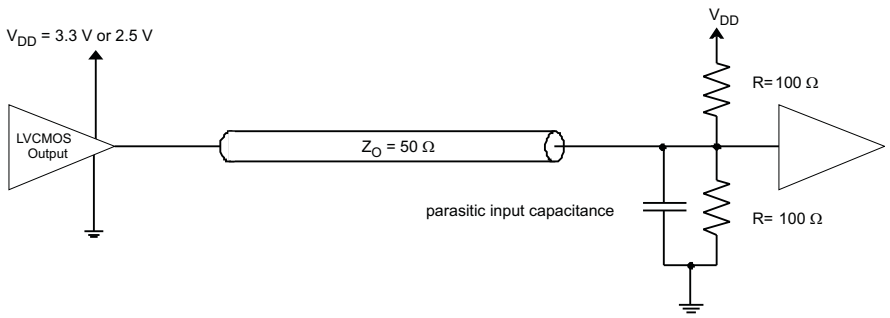

Figure 4. Application Load With 50-Ω Line Termination

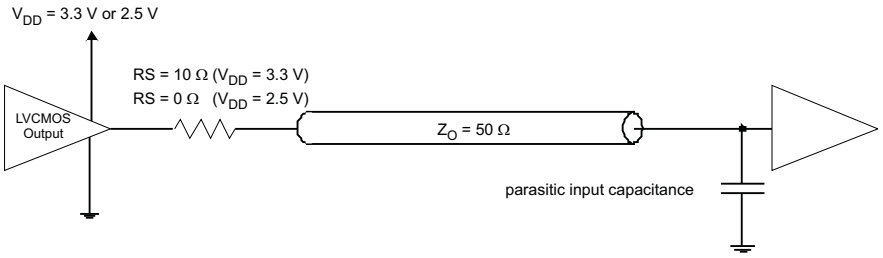

Figure 5. Application Load With Series Line Termination

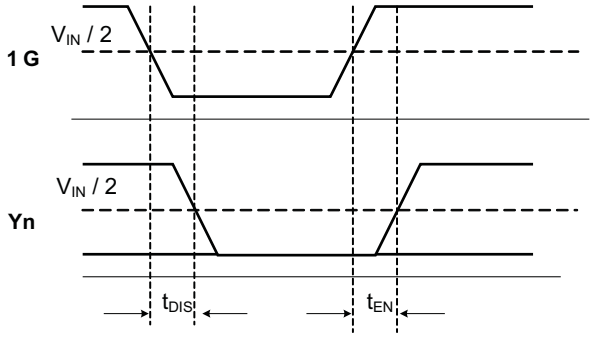

Figure 6. t_{DIS} and t_{EN} for Disable Low

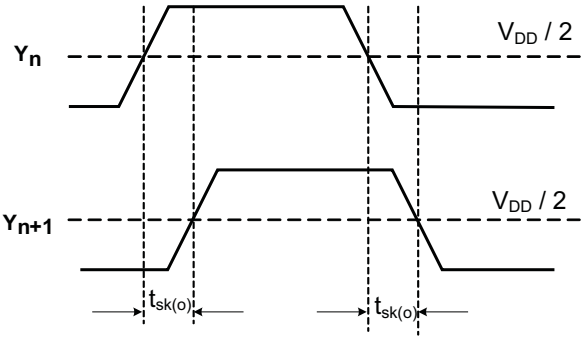

Figure 7. Output Skew $t_{sk(o)}$

Copyright © 2010–2017, Texas Instruments Incorporated

Parameter Measurement Information (continued)

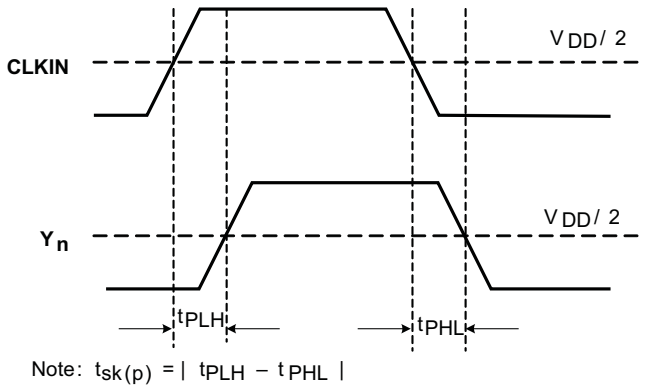

Figure 8. Pulse Skew $t_{sk(p)}$ and Propagation Delay t_{PLH}/t_{PHL}

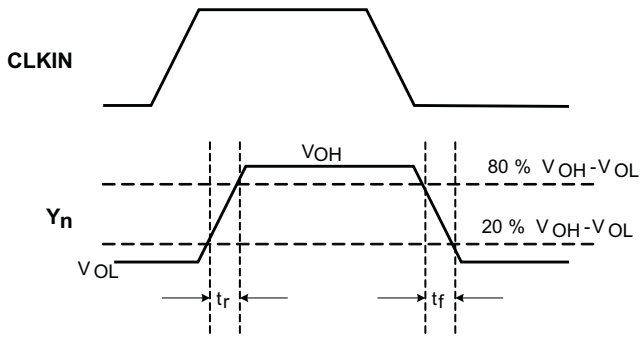

Figure 9. Rise/Fall Times t_r/t_f

8 Detailed Description

8.1 Overview

The CDCLVC11xx family of devices is a low-jitter and low-skew LVCMOS fan-out buffer solution. For best signal integrity, it is important to match the characteristic impedance of the CDCLVC11xx's output driver with that of the transmission line. Figure 5 and Figure 6 show the proper configuration per configuration for both V_{DD} = 3.3 V and V_{DD} = 2.5 V. TI recommends placing the series resistor close to the driver to minimize signal reflection.

8.2 Functional Block Diagram

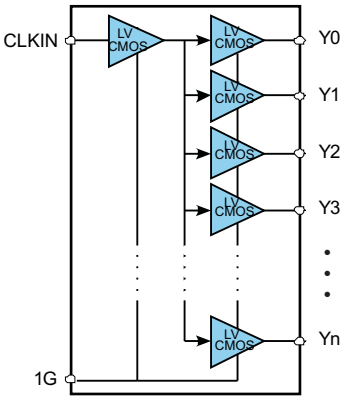

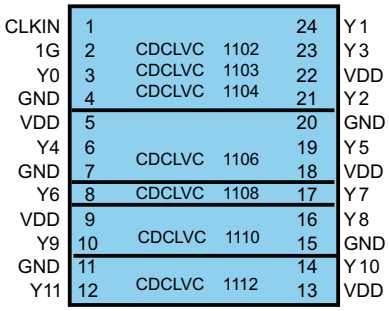

Table 1. Output Logic Table

INPUTS		OUTPUTS
CLKIN	1G	Yn
X	L	L
L	H	L
H	H	H

8.3 Feature Description

The outputs of the CDCLVC11xx can be disabled by driving the asynchronous output enable pin (1G) low. Unused output can be left floating to reduce overall system component cost. All supply and ground pins must be connected to V_{DD} and GND, respectively.

8.4 Device Functional Modes

The CDCLVC11xx operates from supplies between 2.5 V and 3.3 V.

Copyright © 2010–2017, Texas Instruments Incorporated

9 Application and Implementation

NOTE

Information in the following applications sections is not part of the TI component specification, and TI does not warrant its accuracy or completeness. TI's customers are responsible for determining suitability of components for their purposes. Customers should validate and test their design implementation to confirm system functionality.

9.1 Application Information

The CDCLVC11xx family is a low additive jitter LVCMOS buffer solution that can operate up to 250 MHz at and 180 MHz at V_{DD} = 2.5 V. Low output skew as well as the ability for asynchronous output enable is featured to simultaneously enable or disable buffered clock outputs as necessary in the application.

9.2 Typical Application

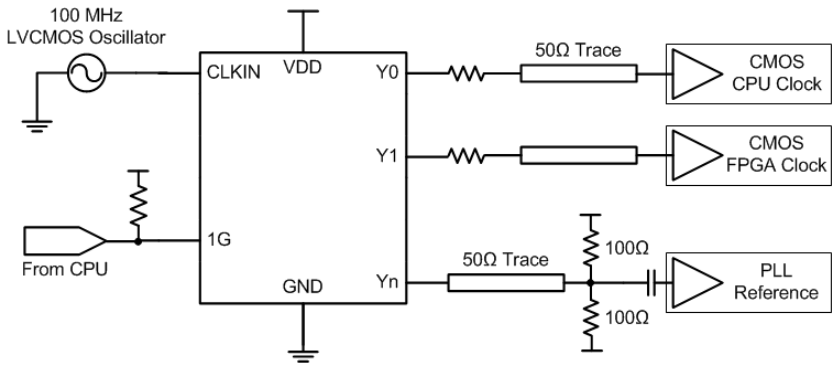

Figure 10. Example System Configuration

9.2.1 Design Requirements

The CDCLVC11xx shown in Figure 10 is configured to fan out a 100-MHz signal from a local LVCMOS oscillator. The CPU is configured to control the output state through 1G.

The configuration example is driving three LVCMOS receivers in a backplane application with the following properties:

- The CPU clock can accept a full swing DC-coupled LVCMOS signal. A series resistor is placed near the CDCLVC11xx to closely match the characteristic impedance of the trace to minimize reflections.
- The FPGA clock is similarly DC-coupled with an appropriate series resistor placed near the CDCLVC11xx.
- The PLL in this example can accept a lower amplitude signal, so a Thevenin's equivalent termination is used. The PLL receiver features internal biasing, so AC coupling can be used when common-mode voltage is mismatched.

9.2.2 Detailed Design Procedure

Refer to Figure 5 and the *Electrical Characteristics* table to determine the appropriate series resistance needed for matching the output impedance of the CDCLVC11xx to that of the characteristic impedance of the transmission line.

Unused outputs can be left floating. See the *Power Supply Recommendations* section for recommended filtering techniques.

Typical Application (continued)

9.2.3 Application Curves

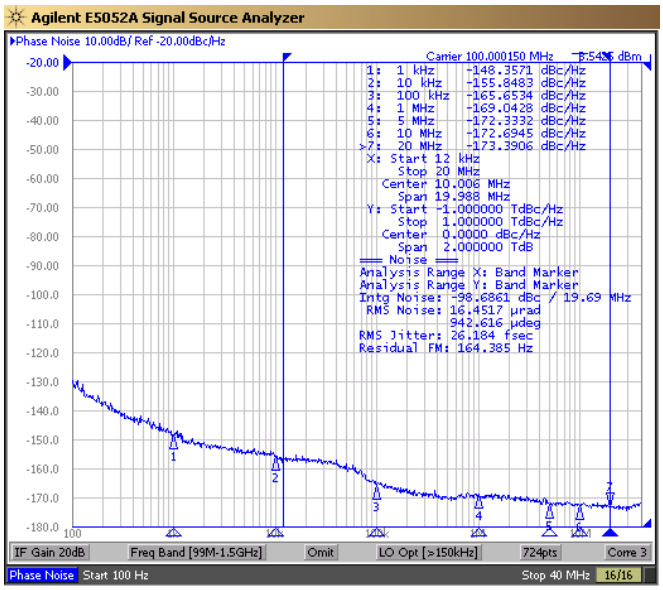

Figure 11. CDCLVC11xx Reference Phase Noise 26 fs (12 kHz to 20 MHz)

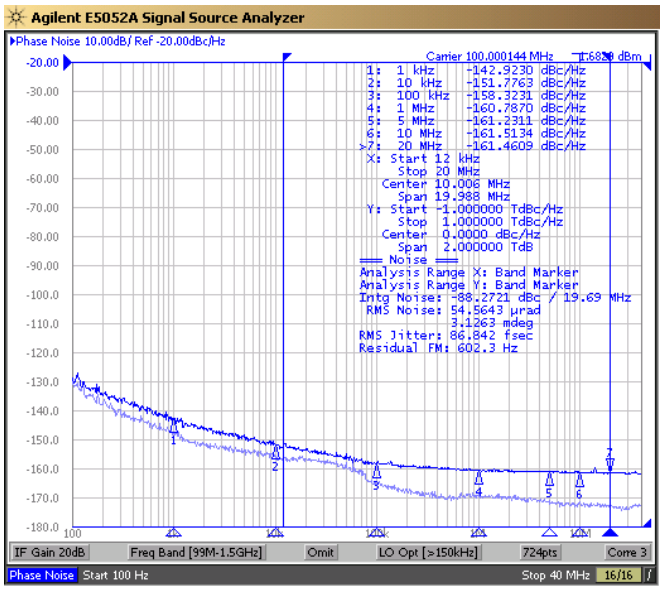

Figure 12. CDCLVC11xx Output Phase Noise 86 fs (12 kHz to 20 MHz)

The low additive jitter of the CDCLVC11xx can be shown in the previous application example. The low-noise 100-MHz XO with 26-fs RMS jitter drives the CDCLVC11xx, resulting in 86-fs RMS jitter when integrated from 12 kHz to 20 MHz. The resultant additive jitter is a low 82-fs RMS for this configuration.

10 Power Supply Recommendations

High-performance clock buffers are sensitive to noise on the power supply, which can dramatically increase the additive jitter of the buffer. Thus, it is essential to reduce noise from the system power supply, especially when the jitter and phase noise is critical to applications.

Filter capacitors are used to eliminate the low-frequency noise from the power supply, where the bypass capacitors provide the very low impedance path for high-frequency noise and guards the power supply system against induced fluctuations. These bypass capacitors also provide instantaneous current surges as required by the device and should have low equivalent series resistance (ESR). To properly use the bypass capacitors, they must be placed very close to the power-supply terminals and laid out with short loops to minimize inductance. TI recommends adding as many high-frequency (for example, 0.1 µF) bypass capacitors, as there are supply terminals in the package. TI recommends, but does not require, inserting a ferrite bead between the board power supply and the chip power supply that isolates the high-frequency switching noises generated by the clock buffer; these beads prevent the switching noise from leaking into the board supply. It is imperative to choose an appropriate ferrite bead with very low DC resistance to provide adequate isolation between the board supply and the chip supply, as well as to maintain a voltage at the supply terminals that is greater than the minimum voltage required for proper operation.

Copyright © 2010–2017, Texas Instruments Incorporated

Figure 13 shows this recommended power supply decoupling method.

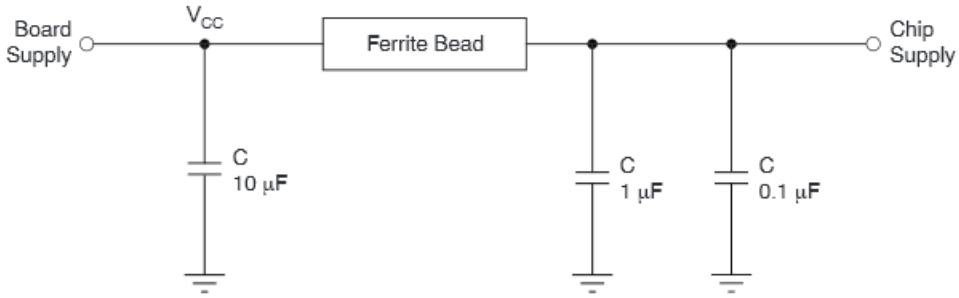

Figure 13. Power Supply Decoupling

10.1 Power Considerations

The following power consideration refers to the device-consumed power consumption only. The device power consumption is the sum of static power and dynamic power. The dynamic power usage consists of two components:

- Power used by the device as it switches states.
- Power required to charge any output load.

The output load can be capacitive only or capacitive and resistive. The following formula and the power graphs in and Figure 1 can be used to obtain the power consumption of the device:

$P_{dev} = P_{stat} + n\ (P_{dyn} + P_{Cload})$
$P_{stat} = V_{DD} \times I_{DD}$
$P_{dyn} + P_{Cload}$ = see and Figure 1

where:

V_{DD} = Supply voltage (or 2.5 V)
I_{DD} = Static device current (typical 6 mA for V_{DD} = 3.3 V; typical 3 mA for V_{DD} = 2.5 V)
n = Number of switching output pins

Example for device power consumption for CDCLVC1104: four outputs are switching, f = 120 MHz, V_{DD} = 3.3 V, and C_{load} = 2 pF per output:

$P_{dev} = P_{stat} + n\ (P_{dyn} + P_{Cload})$ = 19.8 mW + 40 mW = 59.8 mW
$P_{stat} = V_{DD} \times I_{DD}$ = 6 mA × 3.3 V = 19.8 mW
$n\ (P_{dyn} + P_{Cload})$ = 4 × 10 mW = 40 mW

NOTE

For dimensioning the power supply, the total power consumption must be considered. The total power consumption is the sum of the device power consumption and the power consumption of the load.

11 Layout

11.1 Layout Guidelines

Figure 14 shows a conceptual layout detailing recommended placement of power supply bypass capacitors. For component side mounting, use 0402 body size capacitors to facilitate signal routing. Keep the connections between the bypass capacitors and the power supply on the device as short as possible. Ground the other side of the capacitor using a low-impedance connection to the ground plane.

11.2 Layout Example

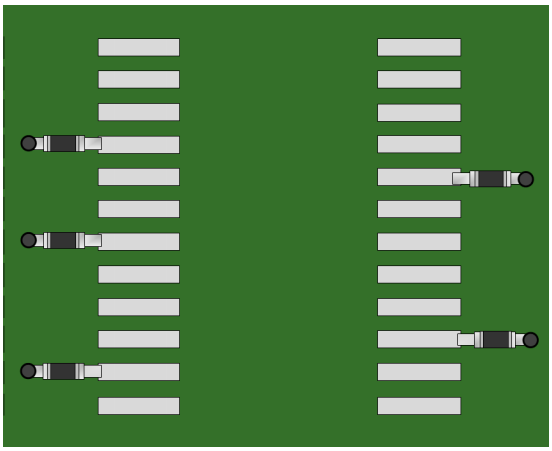

Figure 14. PCB Conceptual Layout

Copyright © 2010–2017, Texas Instruments Incorporated

12 Device and Documentation Support

12.1 Related Links

The table below lists quick access links. Categories include technical documents, support and community resources, tools and software, and quick access to sample or buy.

Table 2. Related Links

PARTS	PRODUCT FOLDER	SAMPLE & BUY	TECHNICAL DOCUMENTS	TOOLS & SOFTWARE	SUPPORT & COMMUNITY
CDCLVC1102	Click here	Click here	Click here	Click here	Click here
CDCLVC1103	Click here	Click here	Click here	Click here	Click here
CDCLVC1104	Click here	Click here	Click here	Click here	Click here
CDCLVC1106	Click here	Click here	Click here	Click here	Click here
CDCLVC1108	Click here	Click here	Click here	Click here	Click here
CDCLVC1110	Click here	Click here	Click here	Click here	Click here
CDCLVC1112	Click here	Click here	Click here	Click here	Click here

12.2 Receiving Notification of Documentation Updates

To receive notification of documentation updates, navigate to the device product folder on ti.com. In the upper right corner, click on *Alert me* to register and receive a weekly digest of any product information that has changed. For change details, review the revision history included in any revised document.

12.3 Community Resources

The following links connect to TI community resources. Linked contents are provided "AS IS" by the respective contributors. They do not constitute TI specifications and do not necessarily reflect TI's views; see TI's Terms of Use.

TI E2E™ Online Community ***TI's Engineer-to-Engineer (E2E) Community.*** Created to foster collaboration among engineers. At e2e.ti.com, you can ask questions, share knowledge, explore ideas and help solve problems with fellow engineers.

Design Support ***TI's Design Support*** Quickly find helpful E2E forums along with design support tools and contact information for technical support.

12.4 Trademarks

E2E is a trademark of Texas Instruments.
All other trademarks are the property of their respective owners.

12.5 Electrostatic Discharge Caution

These devices have limited built-in ESD protection. The leads should be shorted together or the device placed in conductive foam during storage or handling to prevent electrostatic damage to the MOS gates.

12.6 Glossary

SLYZ022 — *TI Glossary*.

This glossary lists and explains terms, acronyms, and definitions.

13 Mechanical, Packaging, and Orderable Information

The following pages include mechanical, packaging, and orderable information. This information is the most current data available for the designated devices. This data is subject to change without notice and revision of this document. For browser-based versions of this data sheet, refer to the left-hand navigation.

PACKAGING INFORMATION

Orderable Device	Status (1)	Package Type	Package Drawing	Pins	Package Qty	Eco Plan (2)	Lead/Ball Finish (6)	MSL Peak Temp (3)	Op Temp (°C)	Device Marking (4/5)	Samples
CDCLVC1102PW	ACTIVE	TSSOP	PW	8	150	Green (RoHS & no Sb/Br)	NIPDAU	Level-1-260C-UNLIM	-40 to 85	C9C2	Samples
CDCLVC1102PWR	ACTIVE	TSSOP	PW	8	2000	Green (RoHS & no Sb/Br)	NIPDAU	Level-1-260C-UNLIM	-40 to 85	C9C2	Samples
CDCLVC1103PW	ACTIVE	TSSOP	PW	8	150	Green (RoHS & no Sb/Br)	NIPDAU	Level-1-260C-UNLIM	-40 to 85	C9C3	Samples
CDCLVC1103PWR	ACTIVE	TSSOP	PW	8	2000	Green (RoHS & no Sb/Br)	NIPDAU	Level-1-260C-UNLIM	-40 to 85	C9C3	Samples
CDCLVC1104PW	ACTIVE	TSSOP	PW	8	150	Green (RoHS & no Sb/Br)	NIPDAU	Level-1-260C-UNLIM	-40 to 85	C9C4	Samples
CDCLVC1104PWR	ACTIVE	TSSOP	PW	8	2000	Green (RoHS & no Sb/Br)	NIPDAU	Level-1-260C-UNLIM	-40 to 85	C9C4	Samples
CDCLVC1106PW	ACTIVE	TSSOP	PW	14	90	Green (RoHS & no Sb/Br)	NIPDAU	Level-1-260C-UNLIM	-40 to 85	C9C6	Samples
CDCLVC1106PWR	ACTIVE	TSSOP	PW	14	2000	Green (RoHS & no Sb/Br)	NIPDAU	Level-1-260C-UNLIM	-40 to 85	C9C6	Samples
CDCLVC1108PW	ACTIVE	TSSOP	PW	16	90	Green (RoHS & no Sb/Br)	NIPDAU	Level-1-260C-UNLIM	-40 to 85	C9C8	Samples
CDCLVC1108PWR	ACTIVE	TSSOP	PW	16	2000	Green (RoHS & no Sb/Br)	NIPDAU	Level-1-260C-UNLIM	-40 to 85	C9C8	Samples
CDCLVC1110PW	ACTIVE	TSSOP	PW	20	70	Green (RoHS & no Sb/Br)	NIPDAU	Level-1-260C-UNLIM	-40 to 85	C9CA	Samples
CDCLVC1110PWR	ACTIVE	TSSOP	PW	20	2000	Green (RoHS & no Sb/Br)	NIPDAU	Level-1-260C-UNLIM	-40 to 85	C9CA	Samples
CDCLVC1112PW	ACTIVE	TSSOP	PW	24	60	Green (RoHS & no Sb/Br)	NIPDAU	Level-1-260C-UNLIM	-40 to 85	C9CC	Samples
CDCLVC1112PWR	ACTIVE	TSSOP	PW	24	2000	Green (RoHS & no Sb/Br)	NIPDAU	Level-1-260C-UNLIM	-40 to 85	C9CC	Samples

(1) The marketing status values are defined as follows:
ACTIVE: Product device recommended for new designs.
LIFEBUY: TI has announced that the device will be discontinued, and a lifetime-buy period is in effect.
NRND: Not recommended for new designs. Device is in production to support existing customers, but TI does not recommend using this part in a new design.
PREVIEW: Device has been announced but is not in production. Samples may or may not be available.
OBSOLETE: TI has discontinued the production of the device.

(2) **RoHS:** TI defines "RoHS" to mean semiconductor products that are compliant with the current EU RoHS requirements for all 10 RoHS substances, including the requirement that RoHS substance do not exceed 0.1% by weight in homogeneous materials. Where designed to be soldered at high temperatures, "RoHS" products are suitable for use in specified lead-free processes. TI may reference these types of products as "Pb-Free".
RoHS Exempt: TI defines "RoHS Exempt" to mean products that contain lead but are compliant with EU RoHS pursuant to a specific EU RoHS exemption.
Green: TI defines "Green" to mean the content of Chlorine (Cl) and Bromine (Br) based flame retardants meet JS709B low halogen requirements of <=1000ppm threshold. Antimony trioxide based flame retardants must also meet the <=1000ppm threshold requirement.

(3) MSL, Peak Temp. - The Moisture Sensitivity Level rating according to the JEDEC industry standard classifications, and peak solder temperature.

(4) There may be additional marking, which relates to the logo, the lot trace code information, or the environmental category on the device.

(5) Multiple Device Markings will be inside parentheses. Only one Device Marking contained in parentheses and separated by a "~" will appear on a device. If a line is indented then it is a continuation of the previous line and the two combined represent the entire Device Marking for that device.

(6) Lead/Ball Finish - Orderable Devices may have multiple material finish options. Finish options are separated by a vertical ruled line. Lead/Ball Finish values may wrap to two lines if the finish value exceeds the maximum column width.

Important Information and Disclaimer: The information provided on this page represents TI's knowledge and belief as of the date that it is provided. TI bases its knowledge and belief on information provided by third parties, and makes no representation or warranty as to the accuracy of such information. Efforts are underway to better integrate information from third parties. TI has taken and continues to take reasonable steps to provide representative and accurate information but may not have conducted destructive testing or chemical analysis on incoming materials and chemicals. TI and TI suppliers consider certain information to be proprietary, and thus CAS numbers and other limited information may not be available for release.

In no event shall TI's liability arising out of such information exceed the total purchase price of the TI part(s) at issue in this document sold by TI to Customer on an annual basis.

TAPE AND REEL INFORMATION

REEL DIMENSIONS

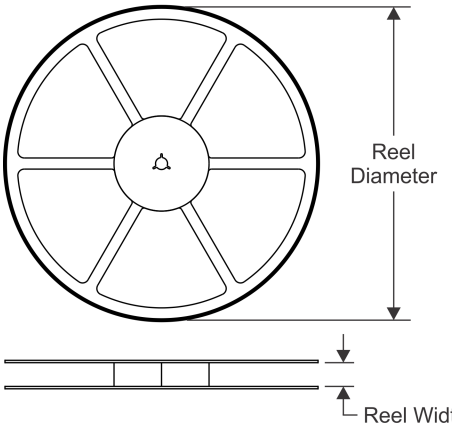

TAPE DIMENSIONS

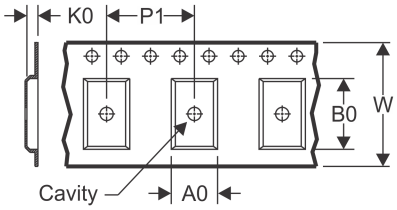

A0	Dimension designed to accommodate the component width
B0	Dimension designed to accommodate the component length
K0	Dimension designed to accommodate the component thickness
W	Overall width of the carrier tape
P1	Pitch between successive cavity centers

QUADRANT ASSIGNMENTS FOR PIN 1 ORIENTATION IN TAPE

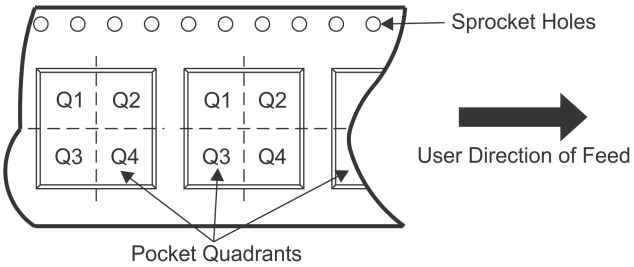

*All dimensions are nominal

Device	Package Type	Package Drawing	Pins	SPQ	Reel Diameter (mm)	Reel Width W1 (mm)	A0 (mm)	B0 (mm)	K0 (mm)	P1 (mm)	W (mm)	Pin1 Quadrant
CDCLVC1102PWR	TSSOP	PW	8	2000	330.0	12.4	7.0	3.6	1.6	8.0	12.0	Q1
CDCLVC1103PWR	TSSOP	PW	8	2000	330.0	12.4	7.0	3.6	1.6	8.0	12.0	Q1
CDCLVC1104PWR	TSSOP	PW	8	2000	330.0	12.4	7.0	3.6	1.6	8.0	12.0	Q1
CDCLVC1106PWR	TSSOP	PW	14	2000	330.0	12.4	6.9	5.6	1.6	8.0	12.0	Q1
CDCLVC1108PWR	TSSOP	PW	16	2000	330.0	12.4	6.9	5.6	1.6	8.0	12.0	Q1
CDCLVC1110PWR	TSSOP	PW	20	2000	330.0	16.4	6.95	7.1	1.6	8.0	16.0	Q1
CDCLVC1112PWR	TSSOP	PW	24	2000	330.0	16.4	6.95	8.3	1.6	8.0	16.0	Q1

TAPE AND REEL BOX DIMENSIONS

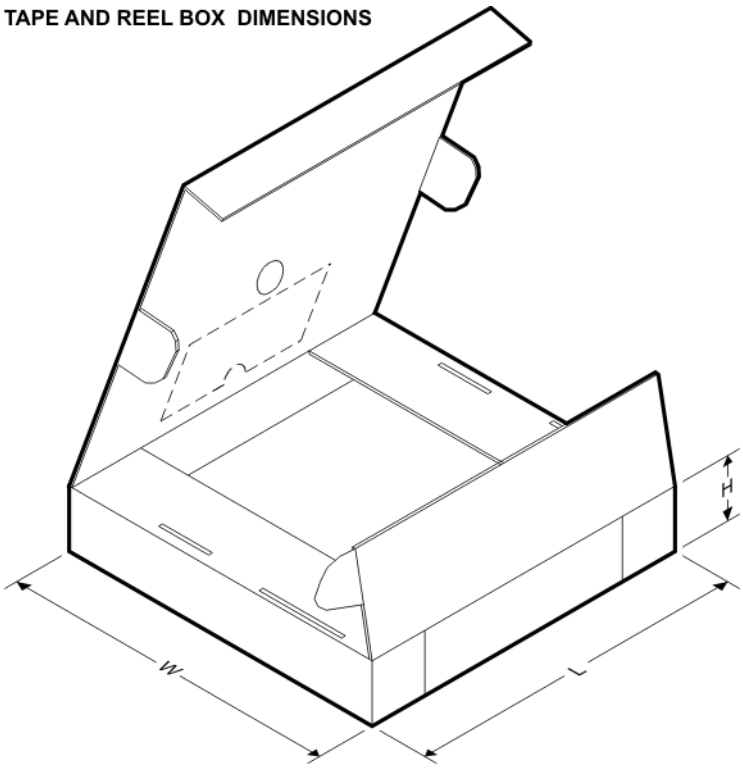

*All dimensions are nominal

Device	Package Type	Package Drawing	Pins	SPQ	Length (mm)	Width (mm)	Height (mm)
CDCLVC1102PWR	TSSOP	PW	8	2000	853.0	449.0	35.0
CDCLVC1103PWR	TSSOP	PW	8	2000	367.0	367.0	35.0
CDCLVC1104PWR	TSSOP	PW	8	2000	367.0	367.0	35.0
CDCLVC1106PWR	TSSOP	PW	14	2000	367.0	367.0	35.0
CDCLVC1108PWR	TSSOP	PW	16	2000	367.0	367.0	35.0
CDCLVC1110PWR	TSSOP	PW	20	2000	367.0	367.0	38.0
CDCLVC1112PWR	TSSOP	PW	24	2000	367.0	367.0	38.0

PW (R-PDSO-G20) PLASTIC SMALL OUTLINE

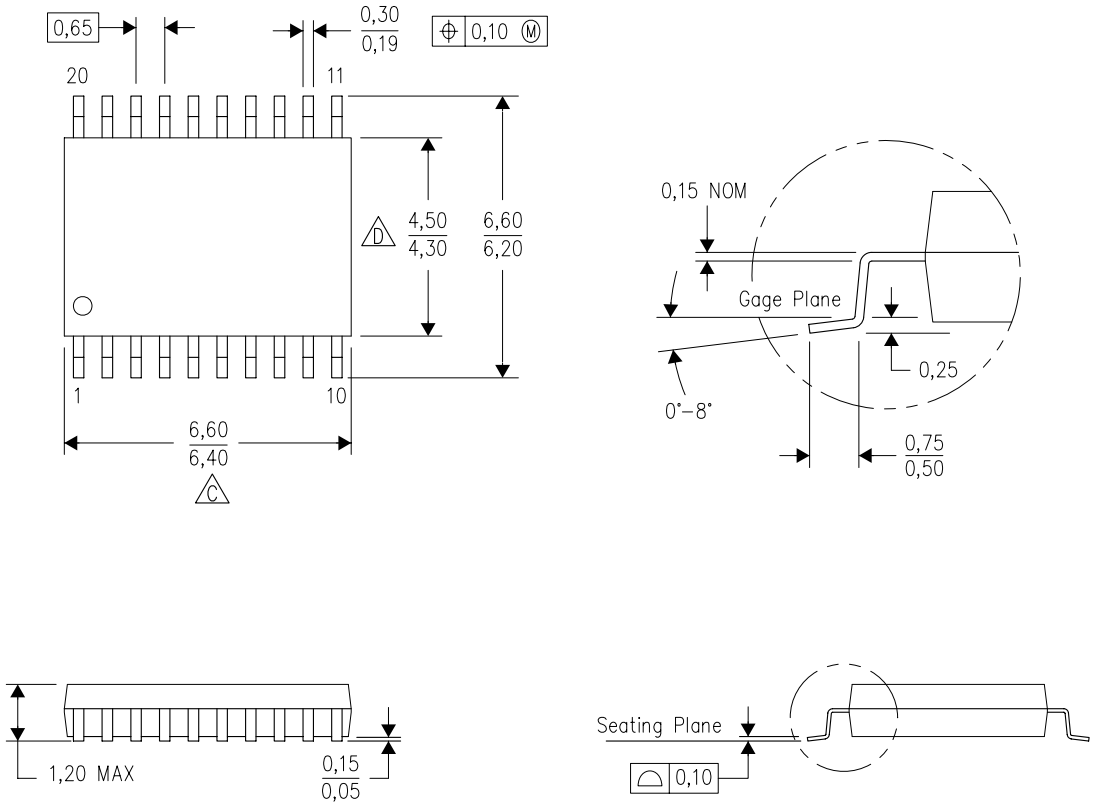

4040064-5/G 02/11

NOTES:
A. All linear dimensions are in millimeters. Dimensioning and tolerancing per ASME Y14.5M-1994.
B. This drawing is subject to change without notice.
C. Body length does not include mold flash, protrusions, or gate burrs. Mold flash, protrusions, or gate burrs shall not exceed 0,15 each side.
D. Body width does not include interlead flash. Interlead flash shall not exceed 0,25 each side.
E. Falls within JEDEC MO-153

PW (R–PDSO–G20) PLASTIC SMALL OUTLINE

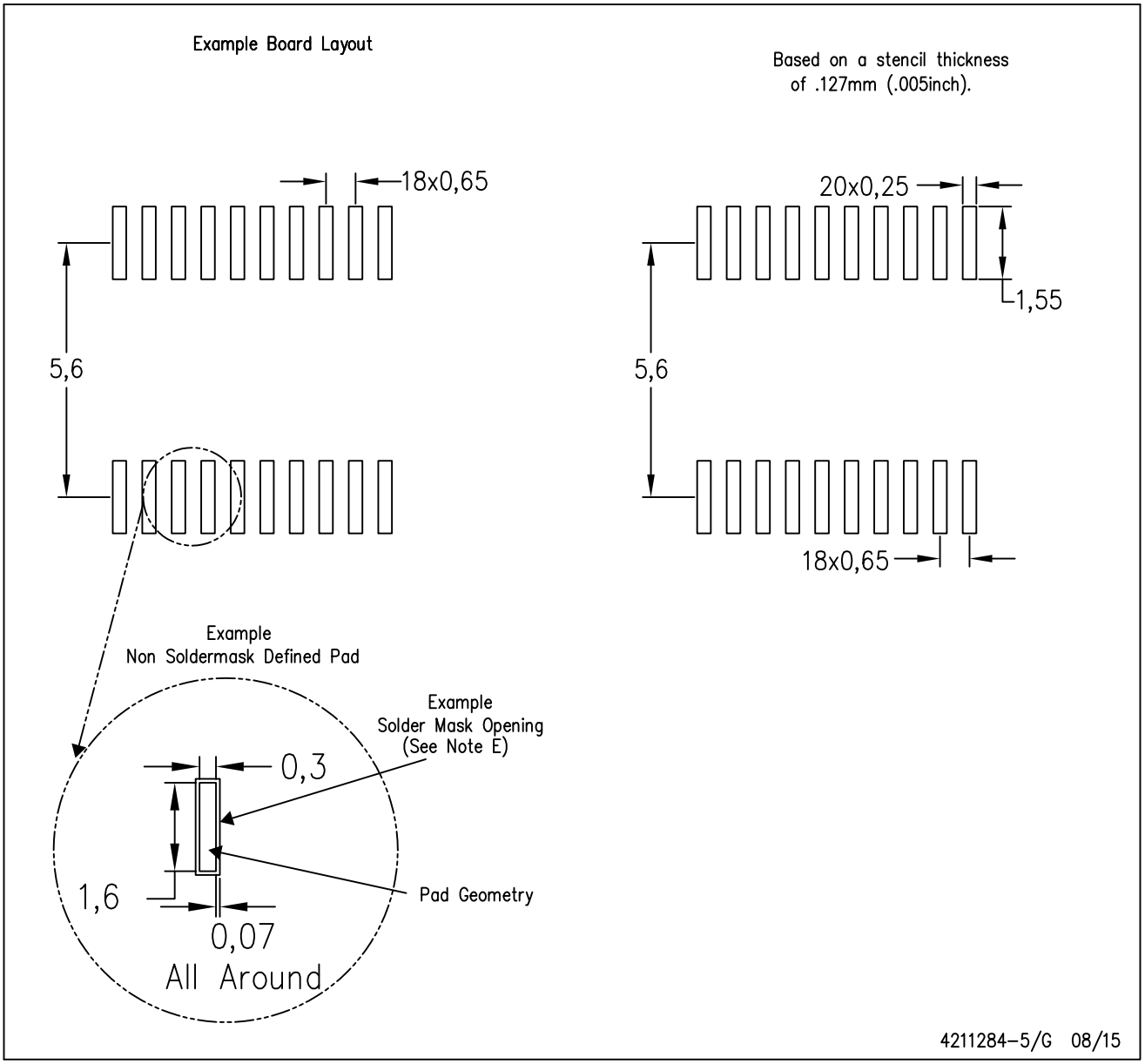

NOTES:
A. All linear dimensions are in millimeters.
B. This drawing is subject to change without notice.
C. Publication IPC–7351 is recommended for alternate design.
D. Laser cutting apertures with trapezoidal walls and also rounding corners will offer better paste release. Customers should contact their board assembly site for stencil design recommendations. Refer to IPC–7525 for other stencil recommendations.
E. Customers should contact their board fabrication site for solder mask tolerances between and around signal pads.

PW (R–PDSO–G14) PLASTIC SMALL OUTLINE

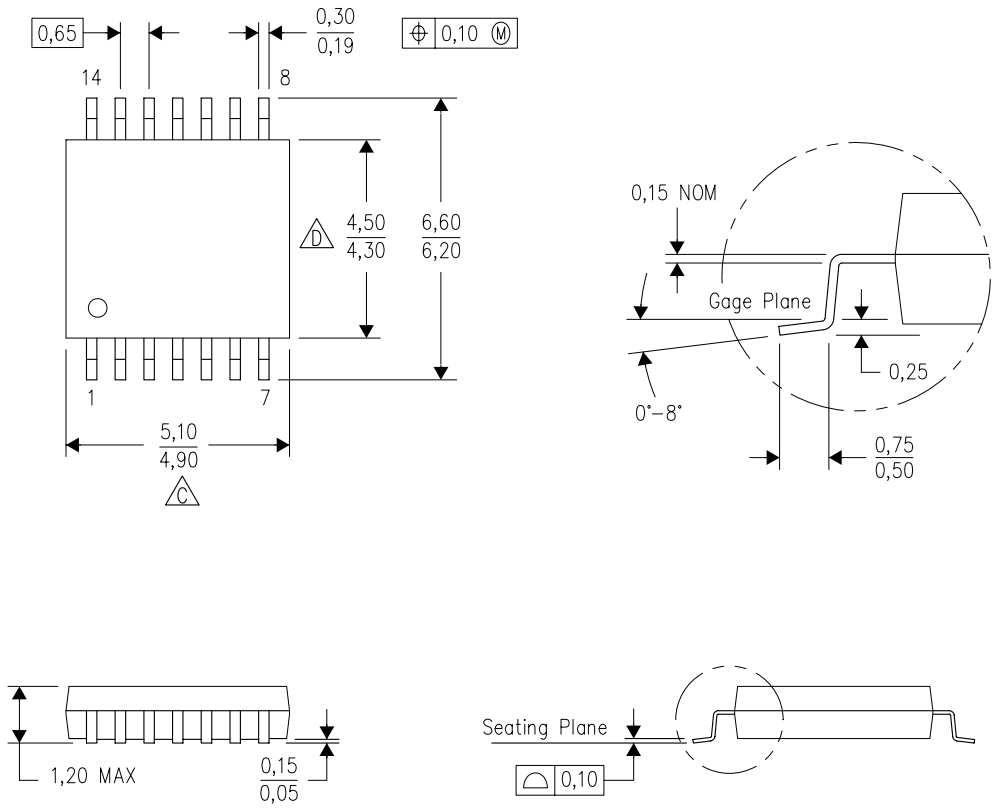

NOTES:
A. All linear dimensions are in millimeters. Dimensioning and tolerancing per ASME Y14.5M–1994.
B. This drawing is subject to change without notice.
C. Body length does not include mold flash, protrusions, or gate burrs. Mold flash, protrusions, or gate burrs shall not exceed 0,15 each side.
D. Body width does not include interlead flash. Interlead flash shall not exceed 0,25 each side.
E. Falls within JEDEC MO–153

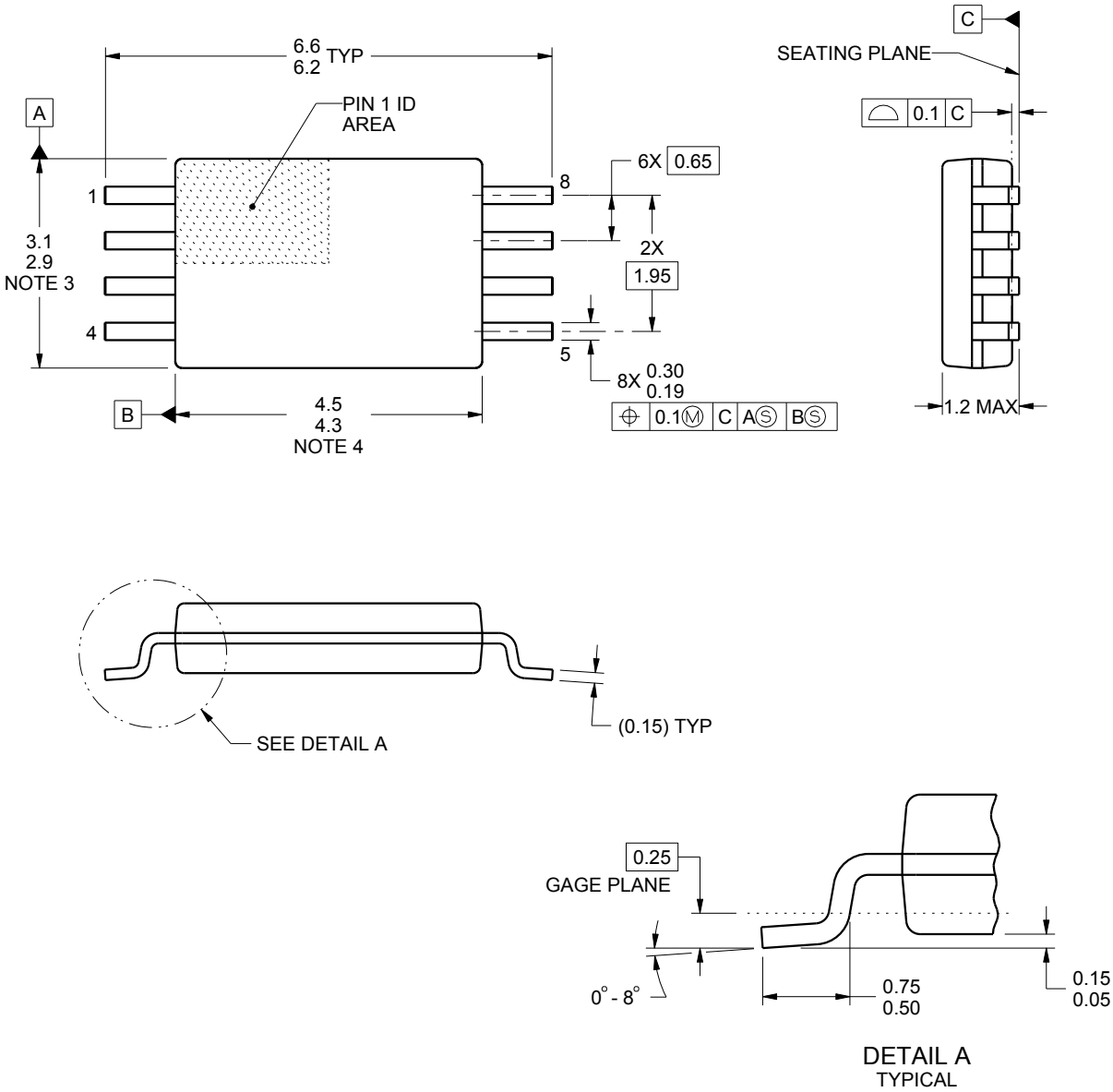

NOTES:

1. All linear dimensions are in millimeters. Any dimensions in parenthesis are for reference only. Dimensioning and tolerancing per ASME Y14.5M.
2. This drawing is subject to change without notice.
3. This dimension does not include mold flash, protrusions, or gate burrs. Mold flash, protrusions, or gate burrs shall not exceed 0.15 mm per side.
4. This dimension does not include interlead flash. Interlead flash shall not exceed 0.25 mm per side.
5. Reference JEDEC registration MO-153, variation AA.

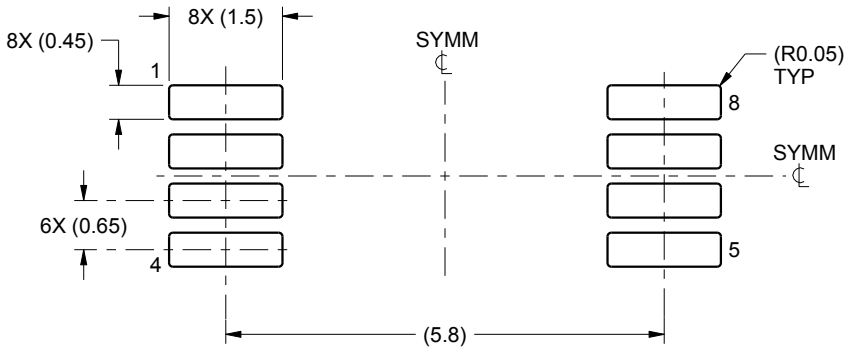

LAND PATTERN EXAMPLE
SCALE:10X

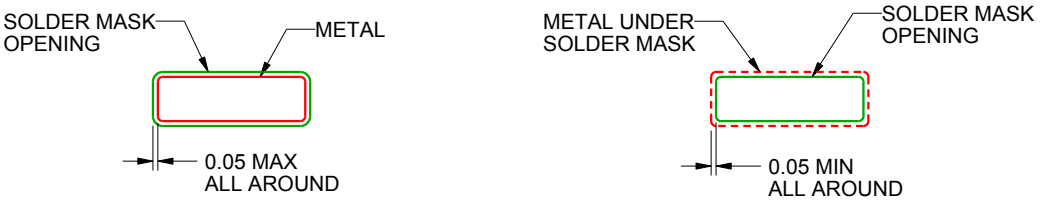

NON SOLDER MASK
DEFINED

SOLDER MASK
DEFINED

SOLDER MASK DETAILS
NOT TO SCALE

4221848/A 02/2015

NOTES: (continued)

6. Publication IPC-7351 may have alternate designs.
7. Solder mask tolerances between and around signal pads can vary based on board fabrication site.

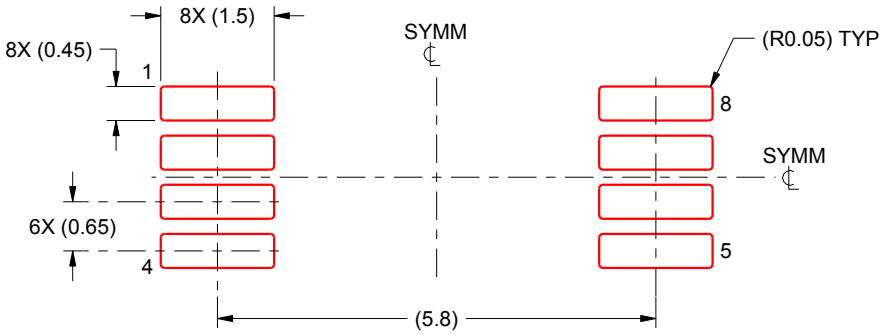

SOLDER PASTE EXAMPLE
BASED ON 0.125 mm THICK STENCIL
SCALE:10X

4221848/A 02/2015

NOTES: (continued)

8. Laser cutting apertures with trapezoidal walls and rounded corners may offer better paste release. IPC-7525 may have alternate design recommendations.
9. Board assembly site may have different recommendations for stencil design.

PW0016A

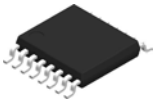

PACKAGE OUTLINE

TSSOP - 1.2 mm max height

SMALL OUTLINE PACKAGE

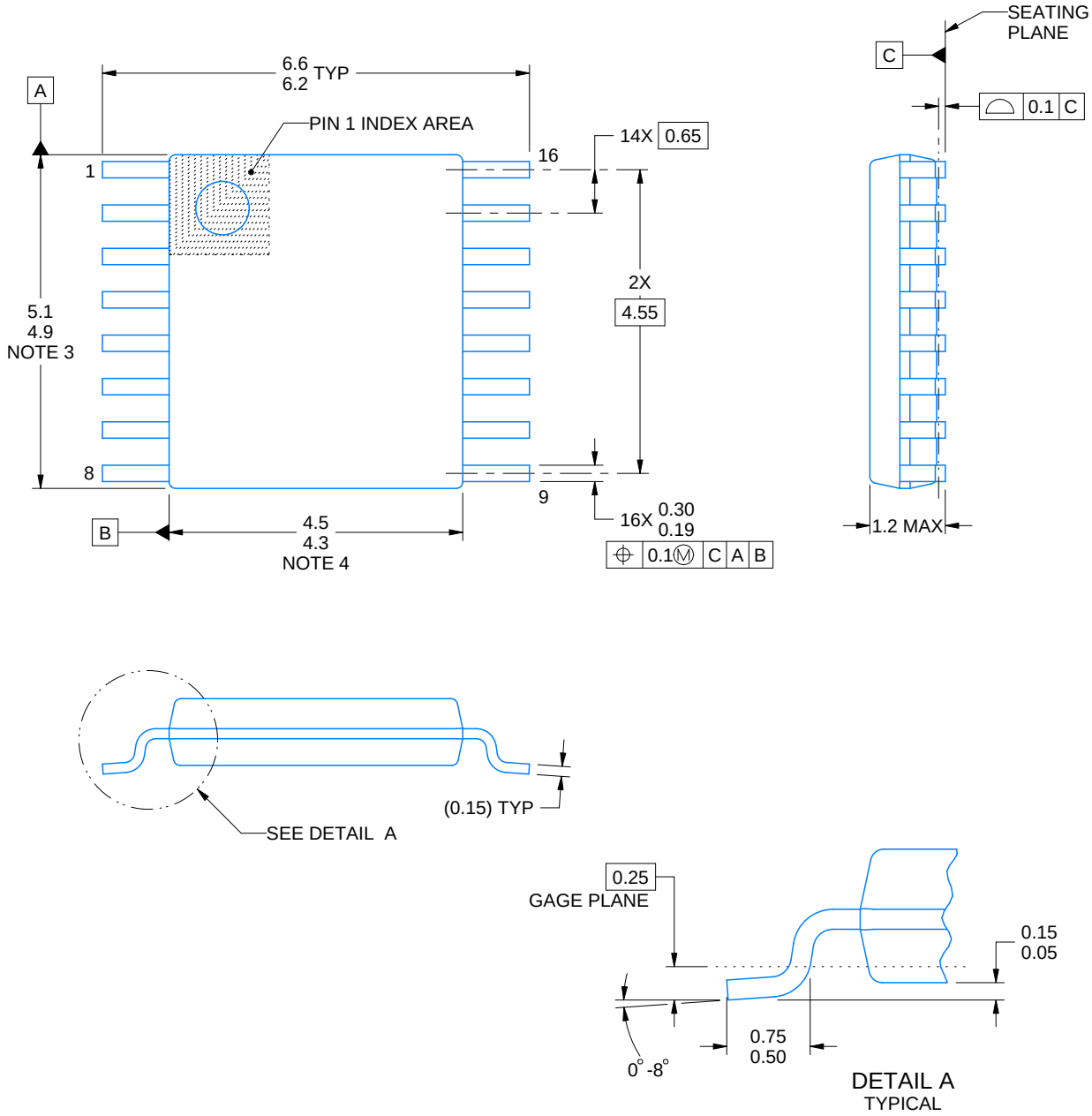

NOTES:

1. All linear dimensions are in millimeters. Any dimensions in parenthesis are for reference only. Dimensioning and tolerancing per ASME Y14.5M.
2. This drawing is subject to change without notice.
3. This dimension does not include mold flash, protrusions, or gate burrs. Mold flash, protrusions, or gate burrs shall not exceed 0.15 mm per side.
4. This dimension does not include interlead flash. Interlead flash shall not exceed 0.25 mm per side.
5. Reference JEDEC registration MO-153.

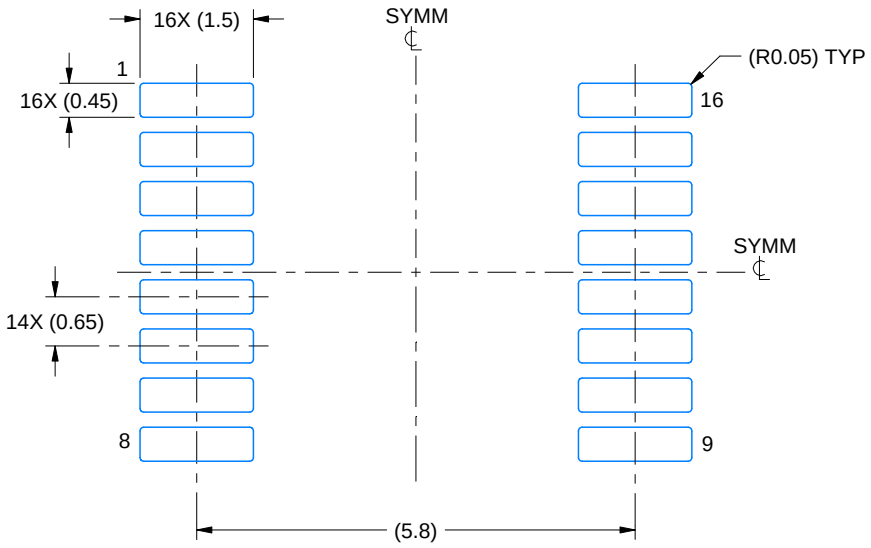

LAND PATTERN EXAMPLE
EXPOSED METAL SHOWN
SCALE: 10X

NON-SOLDER MASK DEFINED (PREFERRED)

SOLDER MASK DEFINED

SOLDER MASK DETAILS

4220204/A 02/2017

NOTES: (continued)

6. Publication IPC-7351 may have alternate designs.
7. Solder mask tolerances between and around signal pads can vary based on board fabrication site.

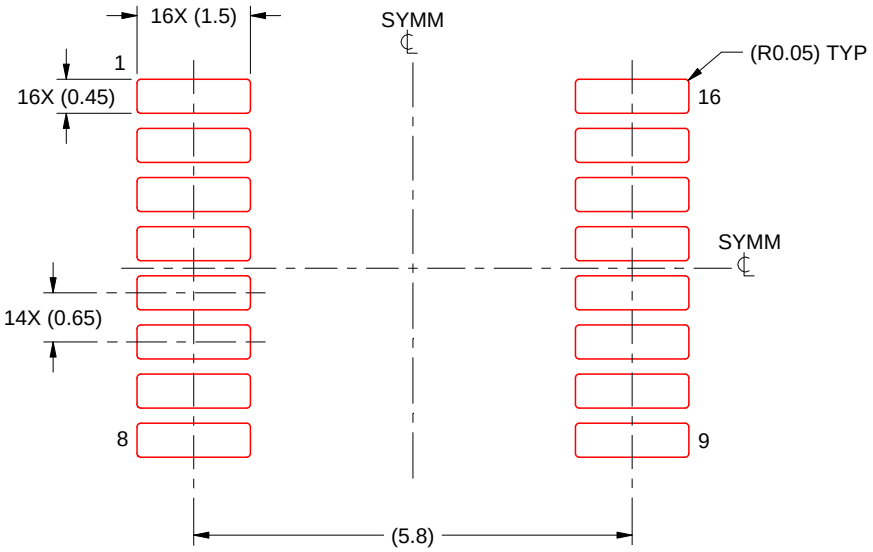

SOLDER PASTE EXAMPLE
BASED ON 0.125 mm THICK STENCIL
SCALE: 10X

4220204/A 02/2017

NOTES: (continued)

8. Laser cutting apertures with trapezoidal walls and rounded corners may offer better paste release. IPC-7525 may have alternate design recommendations.
9. Board assembly site may have different recommendations for stencil design.

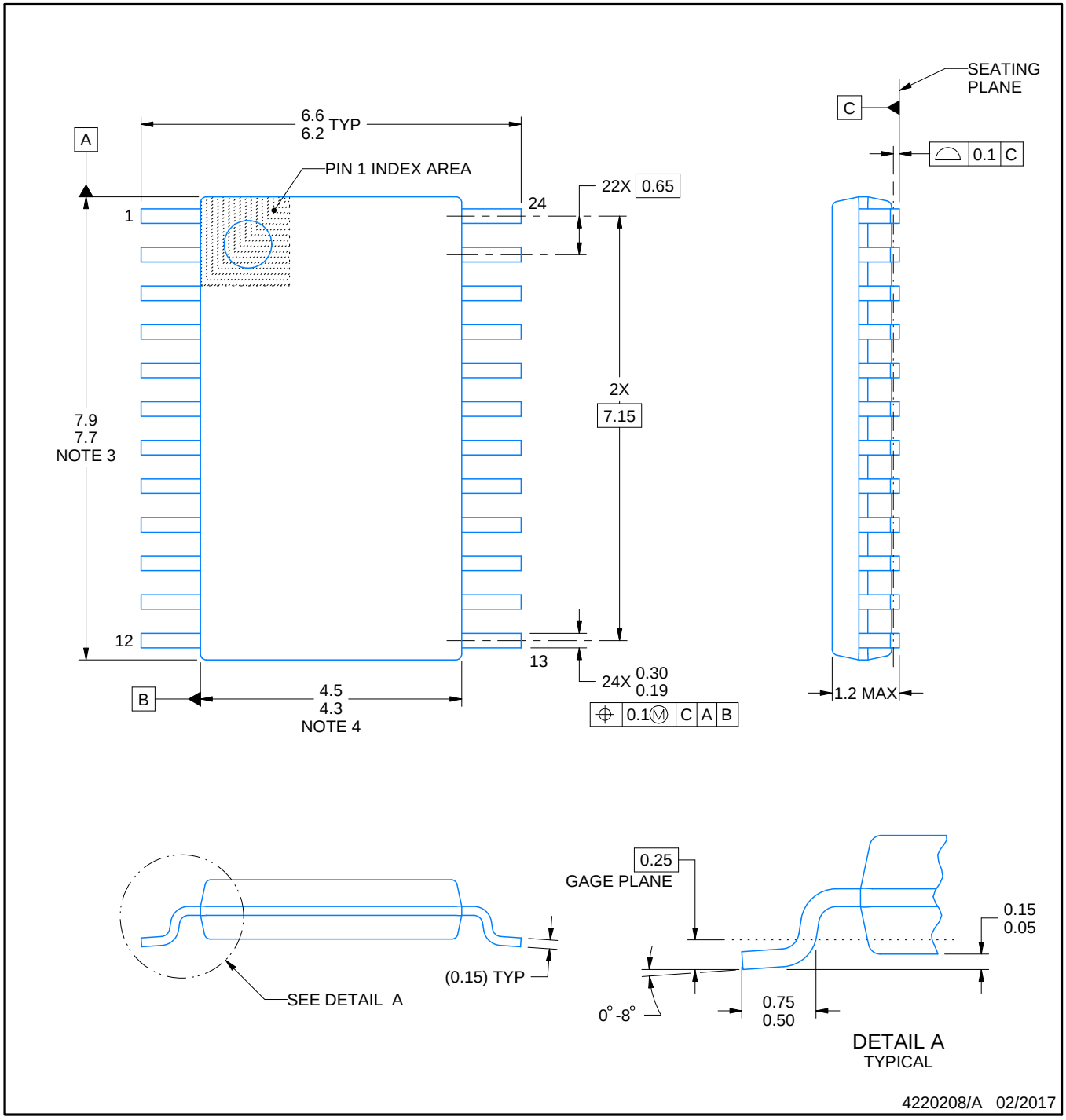

NOTES:

1. All linear dimensions are in millimeters. Any dimensions in parenthesis are for reference only. Dimensioning and tolerancing per ASME Y14.5M.
2. This drawing is subject to change without notice.
3. This dimension does not include mold flash, protrusions, or gate burrs. Mold flash, protrusions, or gate burrs shall not exceed 0.15 mm per side.
4. This dimension does not include interlead flash. Interlead flash shall not exceed 0.25 mm per side.
5. Reference JEDEC registration MO-153.

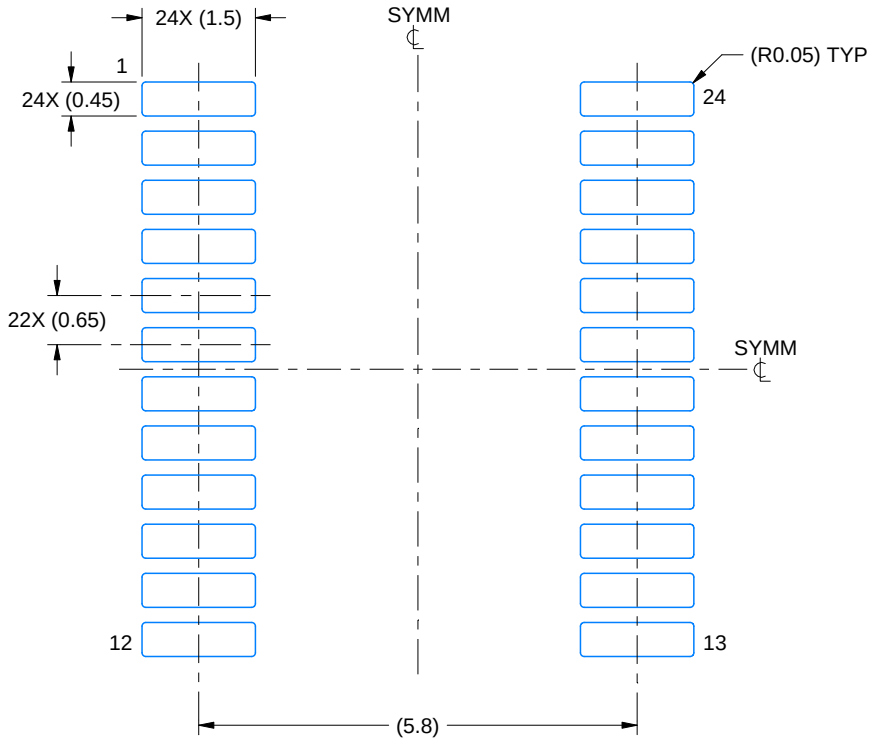

LAND PATTERN EXAMPLE
EXPOSED METAL SHOWN
SCALE: 10X

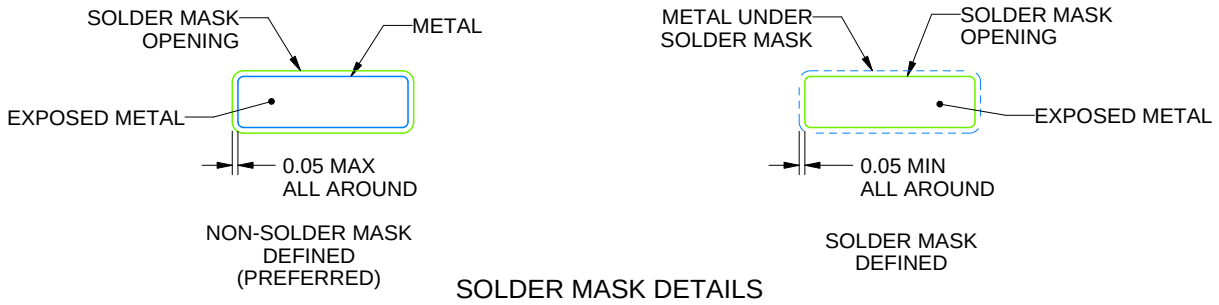

SOLDER MASK DETAILS

4220208/A 02/2017

NOTES: (continued)

6. Publication IPC-7351 may have alternate designs.
7. Solder mask tolerances between and around signal pads can vary based on board fabrication site.

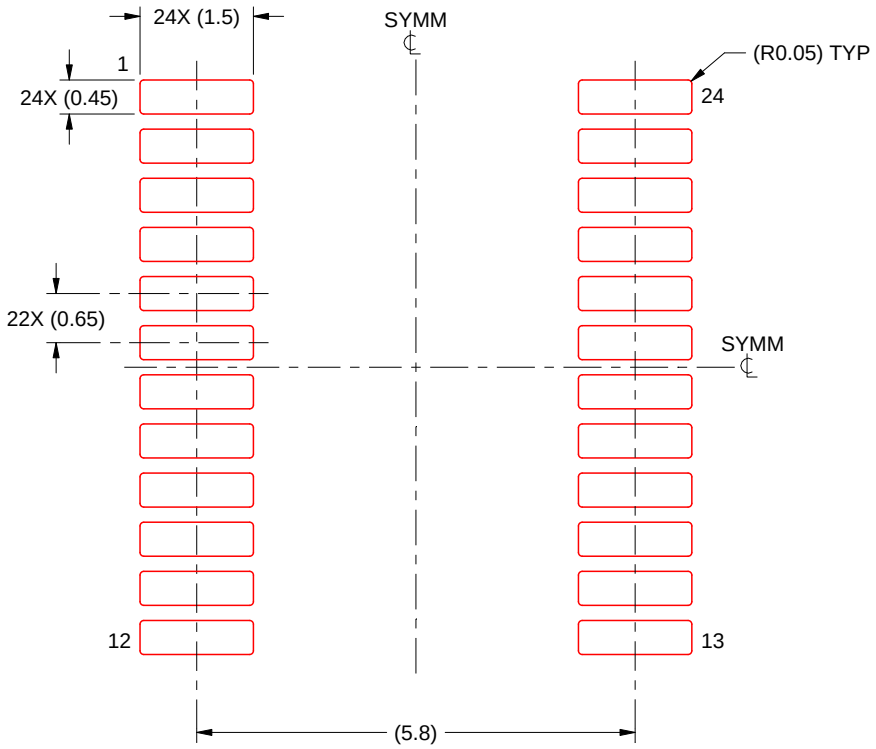

SOLDER PASTE EXAMPLE
BASED ON 0.125 mm THICK STENCIL
SCALE: 10X

4220208/A 02/2017

NOTES: (continued)

8. Laser cutting apertures with trapezoidal walls and rounded corners may offer better paste release. IPC-7525 may have alternate design recommendations.
9. Board assembly site may have different recommendations for stencil design.

IMPORTANT NOTICE AND DISCLAIMER

TI PROVIDES TECHNICAL AND RELIABILITY DATA (INCLUDING DATASHEETS), DESIGN RESOURCES (INCLUDING REFERENCE DESIGNS), APPLICATION OR OTHER DESIGN ADVICE, WEB TOOLS, SAFETY INFORMATION, AND OTHER RESOURCES “AS IS” AND WITH ALL FAULTS, AND DISCLAIMS ALL WARRANTIES, EXPRESS AND IMPLIED, INCLUDING WITHOUT LIMITATION ANY IMPLIED WARRANTIES OF MERCHANTABILITY, FITNESS FOR A PARTICULAR PURPOSE OR NON-INFRINGEMENT OF THIRD PARTY INTELLECTUAL PROPERTY RIGHTS.

These resources are intended for skilled developers designing with TI products. You are solely responsible for (1) selecting the appropriate TI products for your application, (2) designing, validating and testing your application, and (3) ensuring your application meets applicable standards, and any other safety, security, or other requirements. These resources are subject to change without notice. TI grants you permission to use these resources only for development of an application that uses the TI products described in the resource. Other reproduction and display of these resources is prohibited. No license is granted to any other TI intellectual property right or to any third party intellectual property right. TI disclaims responsibility for, and you will fully indemnify TI and its representatives against, any claims, damages, costs, losses, and liabilities arising out of your use of these resources.

TI’s products are provided subject to TI’s Terms of Sale (www.ti.com/legal/termsofsale.html) or other applicable terms available either on ti.com or provided in conjunction with such TI products. TI’s provision of these resources does not expand or otherwise alter TI’s applicable warranties or warranty disclaimers for TI products.

Mailing Address: Texas Instruments, Post Office Box 655303, Dallas, Texas 75265
Copyright © 2020, Texas Instruments Incorporated